LEGACY 2070 E SCHOOL BUS 3X2 (28+1+D) 2DOOR

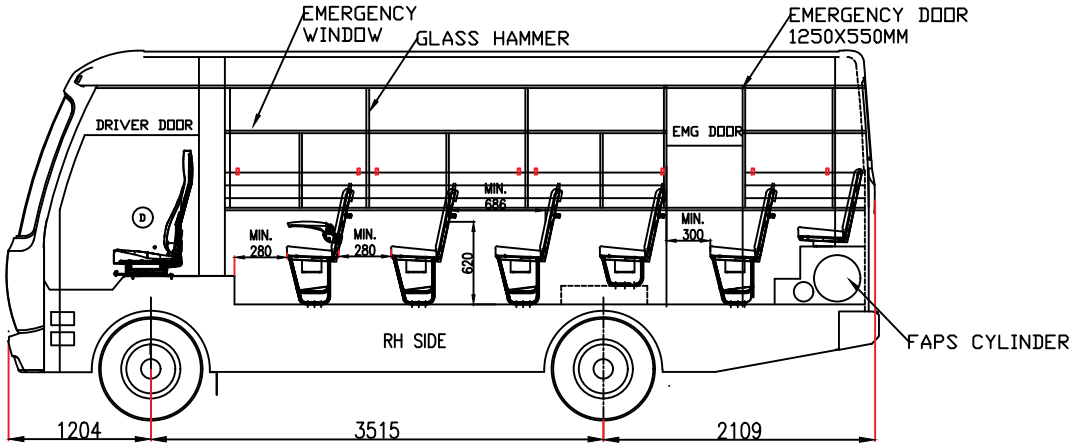

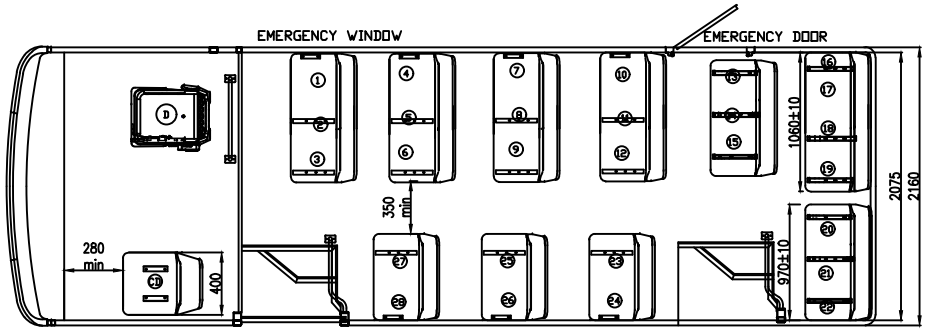

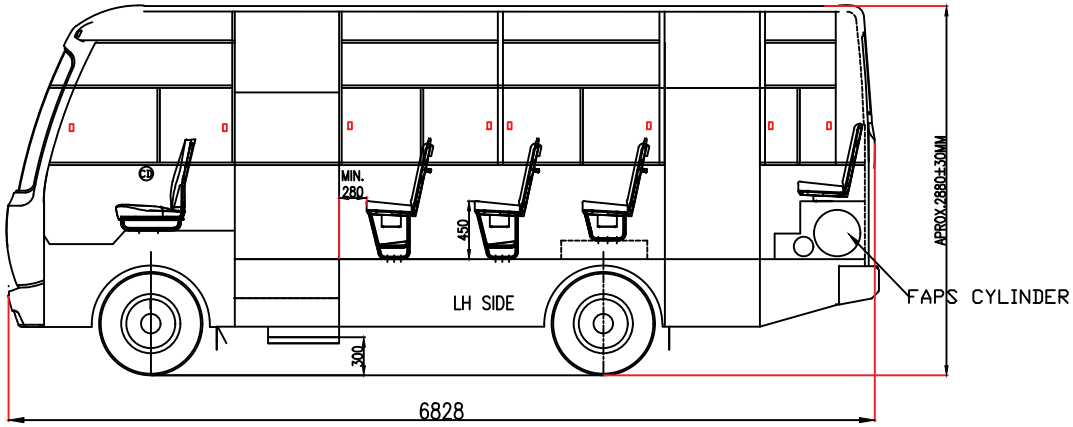

NOTE :-
1. SEAT SUPPLIER-M/S DIVERSITECH PITHAMPUR/MSL
2. D=DRIVER SEAT, CO=CO-DRIVER SEAT

ALL DIMENSION IN MM		AUDI AUTOMOBILES PVT.LTD PITHAMPUR (M.P.)
SCALE	NTS	CUSTOMER NAME :
DRAWN BY :	J C	BUS BODY MODEL: LEGACY 2070 E SCHOOL BUS 3X2 (28+1+D) 2DOOR
CHECKED BY	J C	CHASSIS MODEL: EICHER 2070E CHASSIS BS6
DATE	26.11.2024	TITLE: SEATING LAYOUT3X2 (28+1+D)
		DRAWING NO. AE004000