LEGACY2090L CNG STD BUS HHR) 2X1 SEATING(26+1+D)

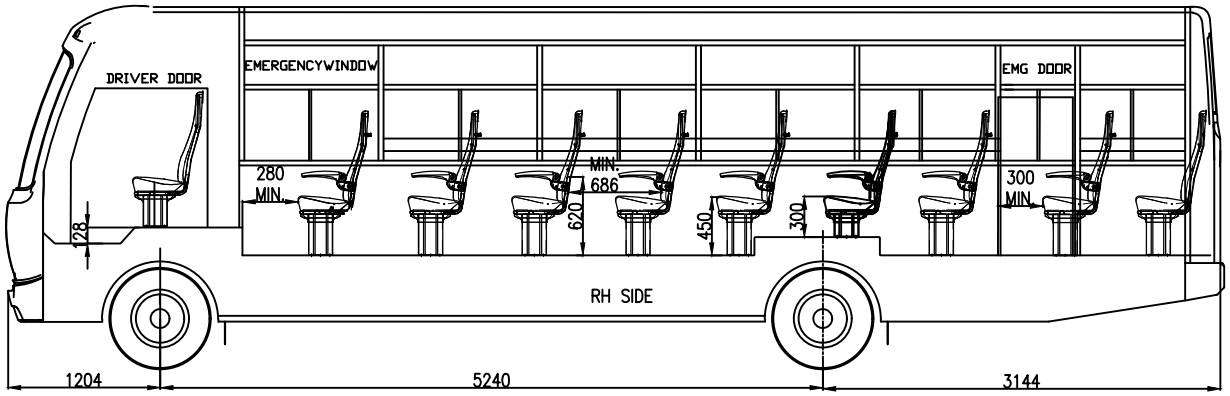

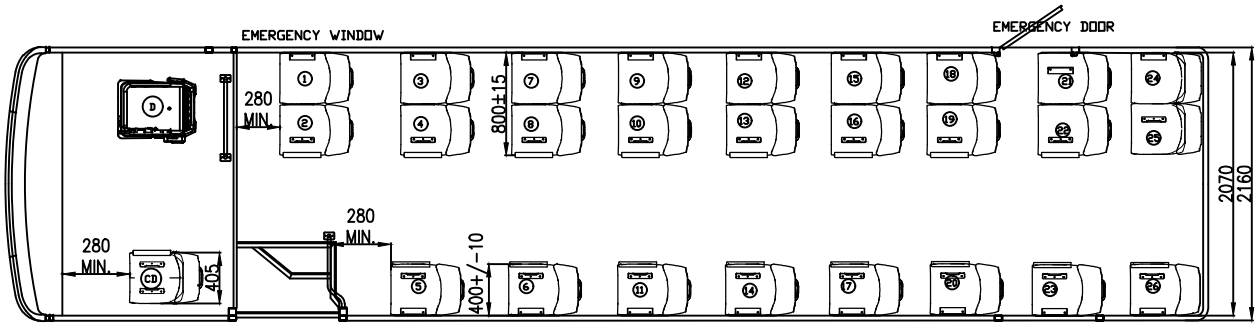

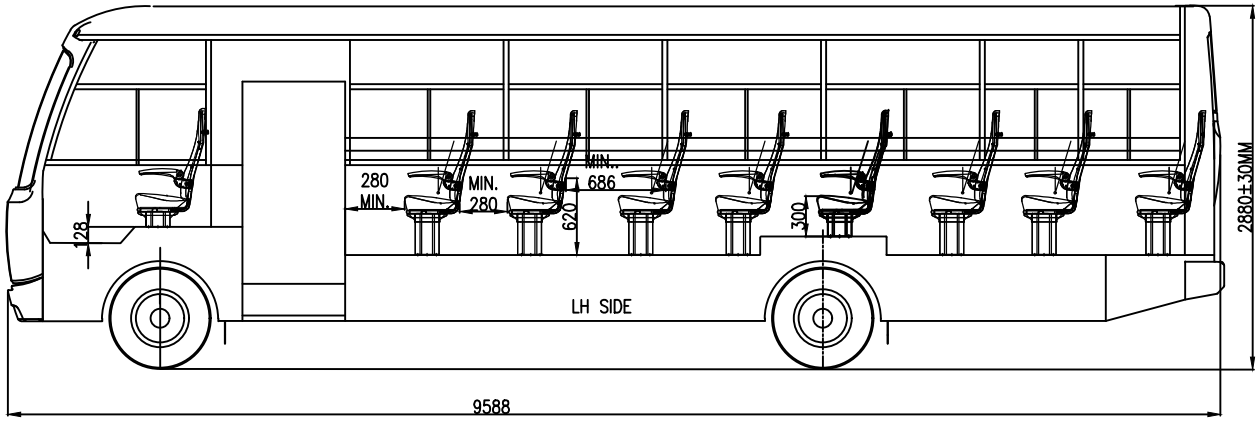

NOTE :-
1. SEAT SUPPLIER-M/S DIVERSITECH ENGG.(PVT)LTD.
2. D=DRIVER SEAT, CD=CO-DRIVER SEAT

ALL DIMENSION IN MM		AUDI AUTOMOBILES PVT.LTD PITHAMPUR (M.P.)
SCALE	NTS	CUSTOMER NAME : iCAT
		LAYOUT TYPE : 2X1 HHR SEATING LAYOUT
DRAWN BY :	J C	BUS BODY MODEL: LEGACY2090LBS6 STD HHR SEATING
CHECKED BY	J C	CHASSIS MODEL: EICHER 2090L CNG COWL & CHASSIS (WITHOUT FACE)
DATE	31.12.2023	TITLE:: SEATING LAYOUT 2X1 HHR (26+CD+D)
		DRAWING NO. AE007873