LEGACY 2075H CNG 2X1 HHR BUS (21+1+D)

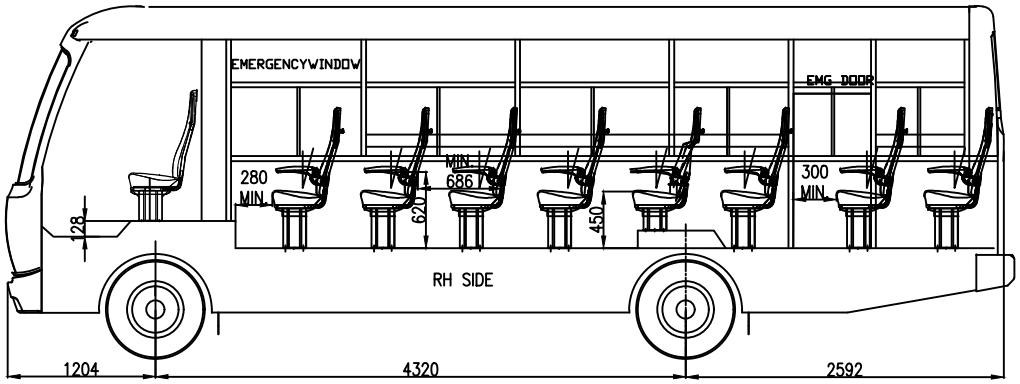

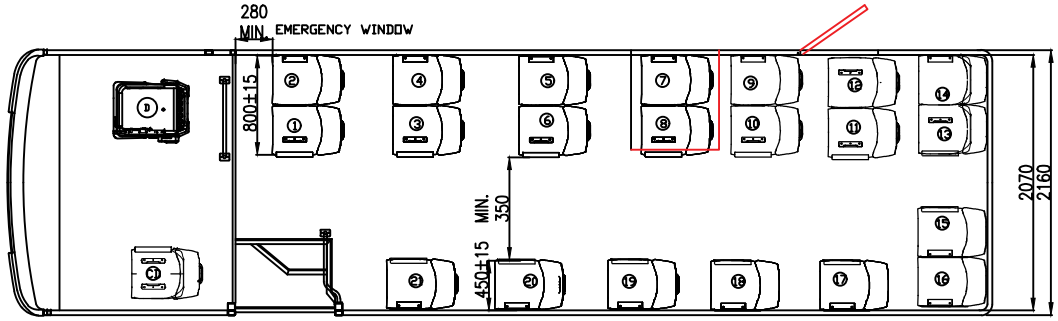

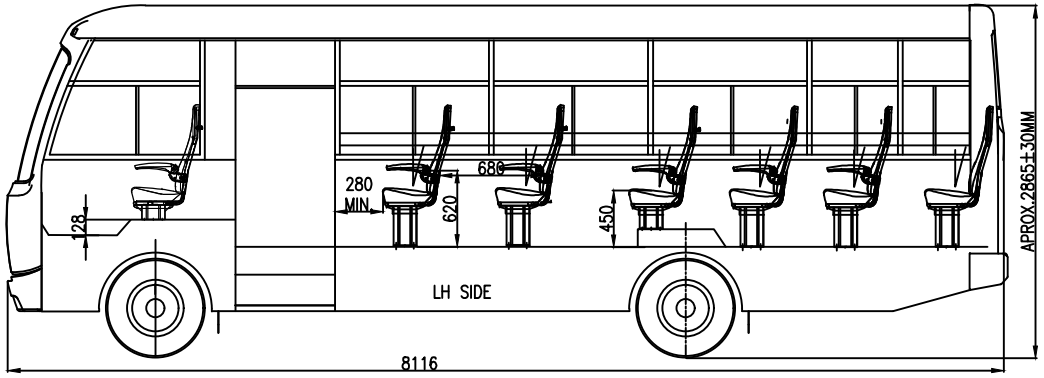

NOTE :-SEAT SUPPLIER-M/S DIVERSITECH ENGG.(PVT)LTD.
ARAI CERTIFICATE NO.----------

NOTE :-
MINIMUM LEG SPACE 280MM
MINIMUM GANGWAY 350MM

ALL DIMENSION IN MM		AUDI AUTOMOBILES PVT.LTD PITHAMPUR (M.P.)
SCALE	NTS	CUSTOMER NAME : iCAT
DRAWN BY :	J C	BUS BODY MODEL: LEGACY 2075H CNG 2X1 HHR BUS (21+1+D)
CHECKED BY	J C	CHASSIS MODEL: EICHER 2075H CNG CDWL & CHASSIS (WITHOUT FACE)
DATE	31.12.2023	TITLE:: SEATING LAYOUT (21+CD+D)
		DRAWING NO. AE007874