LEGACY 2065 E STD HB2X2 SEATING 19+CD+D 2DOOR

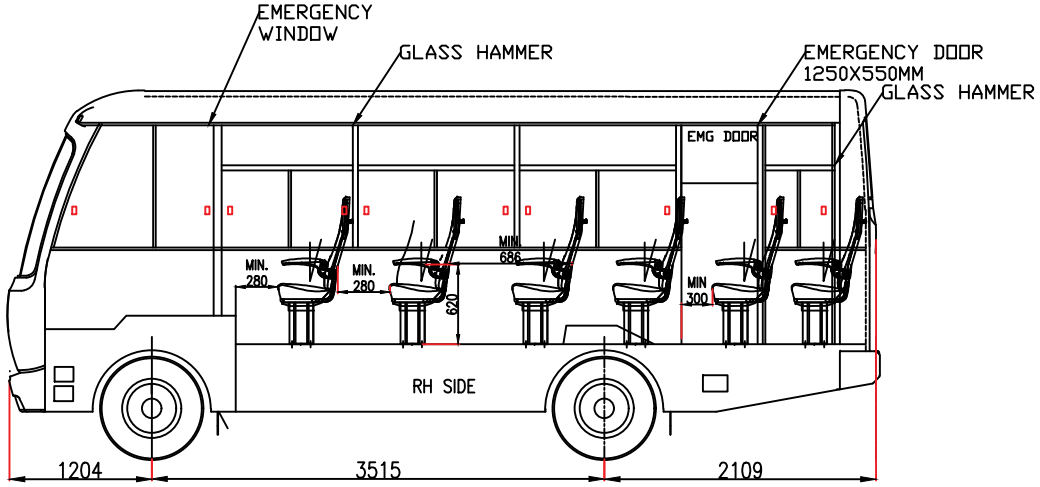

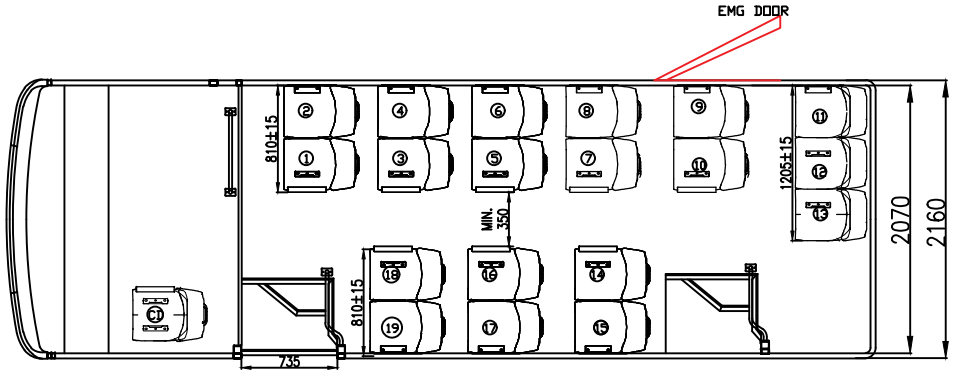

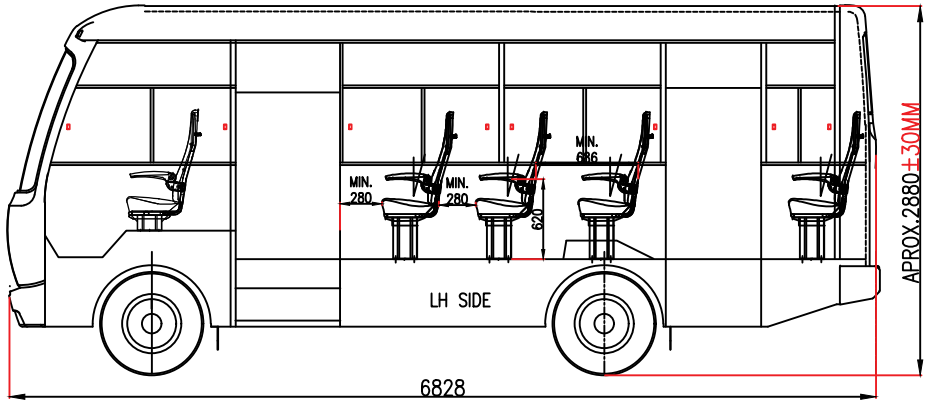

NOTE :-
MINIMUM LEG SPACE 280MM
MINIMUM GANGWAY 350MM

ALL DIMENSION IN MM		AUDI AUTOMOBILES PVT.LTD PITHAMPUR (M.P.)
SCALE	NTS	CUSTOMER NAME : ICAT
DRAWN BY :	J C	BUS BODY MODEL: LEGACY 2065 E STD HB2X2 SEATING 19+CD+D 2DOOR
CHECKED BY	J C	CHASSIS MODEL: EICHER 2065E CHASSIS BS6
DATE	16.09.2024	TITLE:: SEATING LAYOUT (19+CD+D)
		DRAWING NO. AE019110