LEGACY2090K STD BUS 2X2 HHR SEATING(35+CD+D)

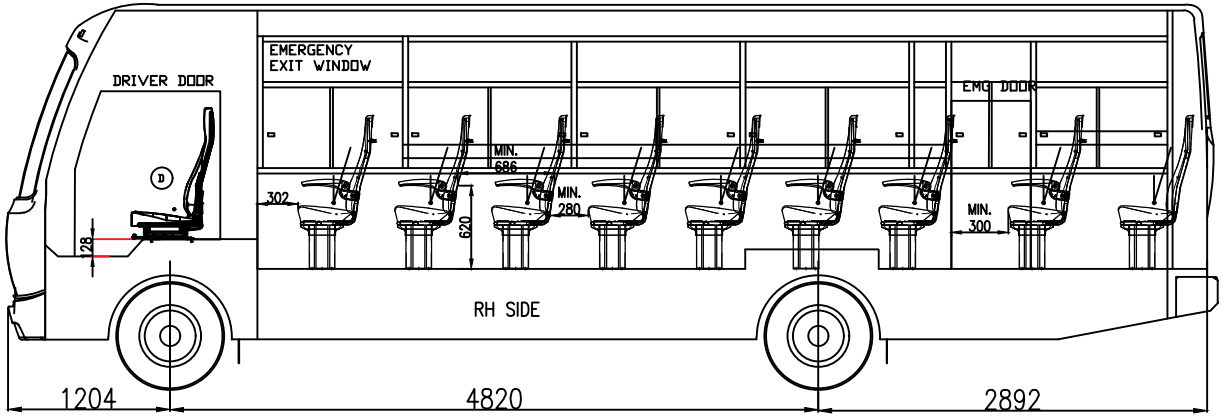

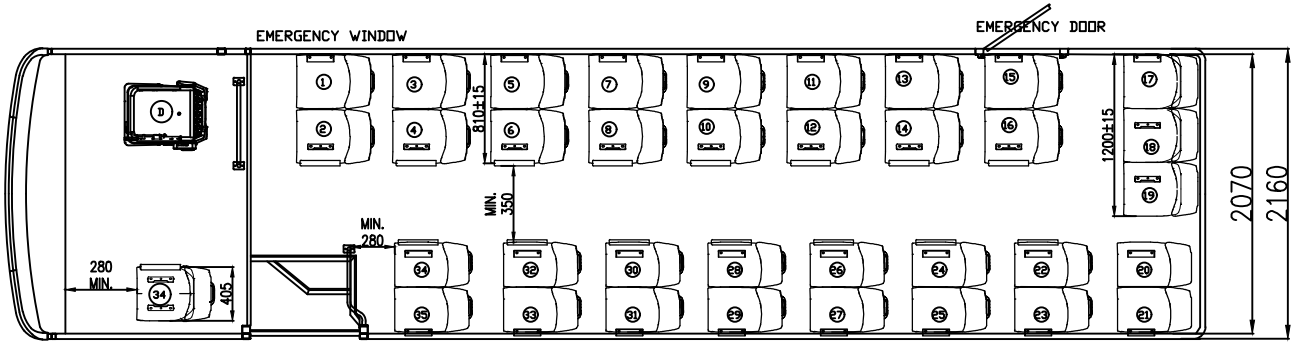

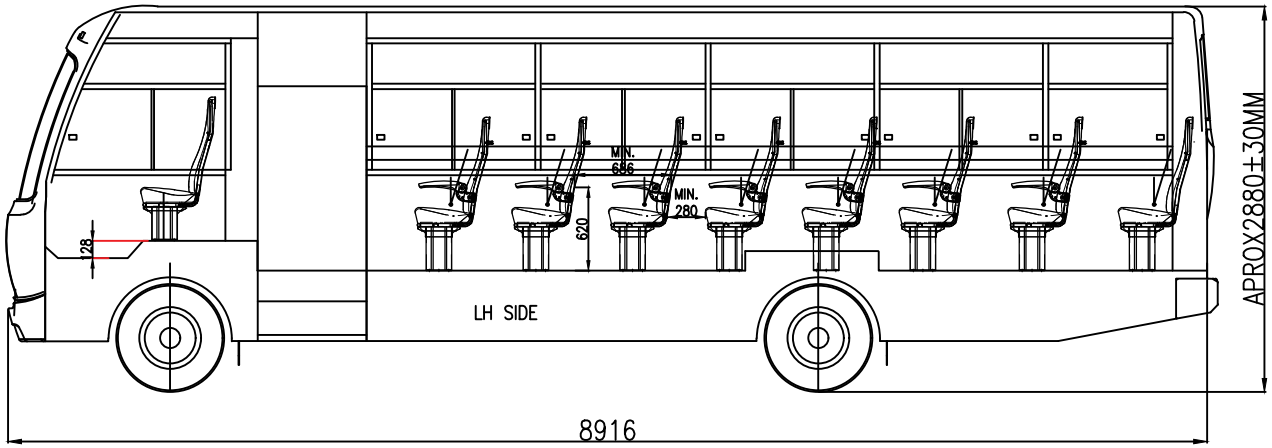

NOTE :-
1. SEAT SUPPLIER-M/S DIVERSITECH ENGG.(PVT)LTD.
2. D=DRIVER SEAT, CD=CO-DRIVER SEAT

ALL DIMENSION IN MM		AUDI AUTOMOBILES PVT.LTD PITHAMPUR (M.P.)
SCALE	NTS	CUSTOMER NAME : LAYOUT TYPE : 2X2 HHR
DRAWN BY :	J C	BUS BODY MODEL: LEGACY 2090K BS6 STD. 2X2 HHR SINGLE DOOR 35+CD+D
CHECKED BY	J C	CHASSIS MODEL: EICHER 2090K CHASSIS BS6
DATE	07.09.2024	TITLE:: SEATING LAYOUT 2X2 HHR (35+CD+D)
		DRAWING NO. AE019683