LEGACY 2090K BS6 STD. 2X2 HHR 2DOOR 33+CD+D)

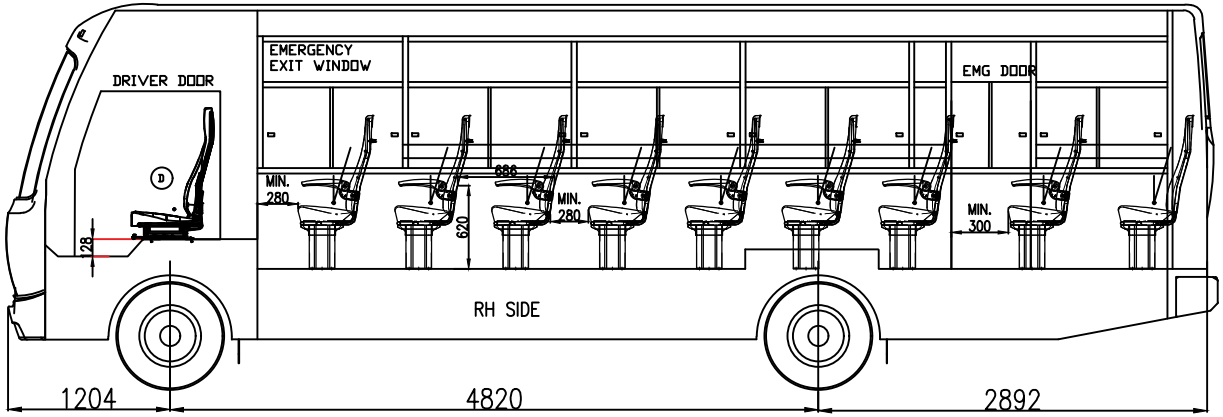

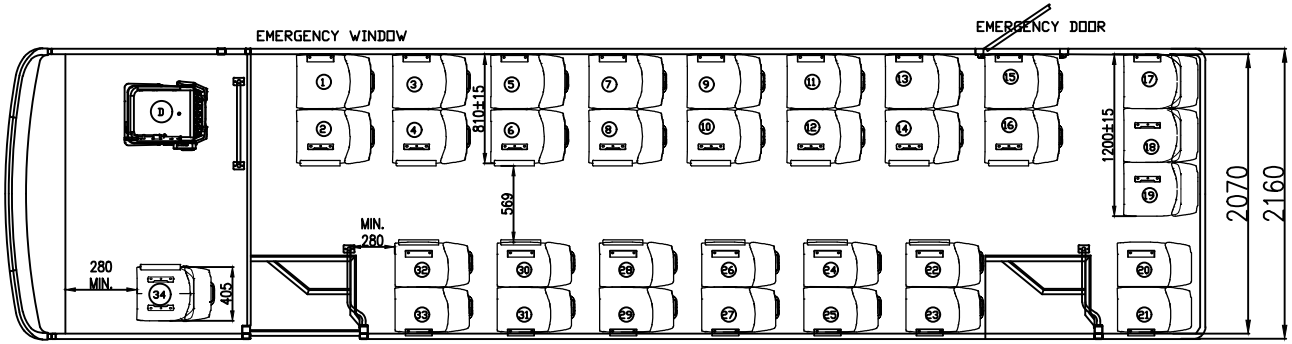

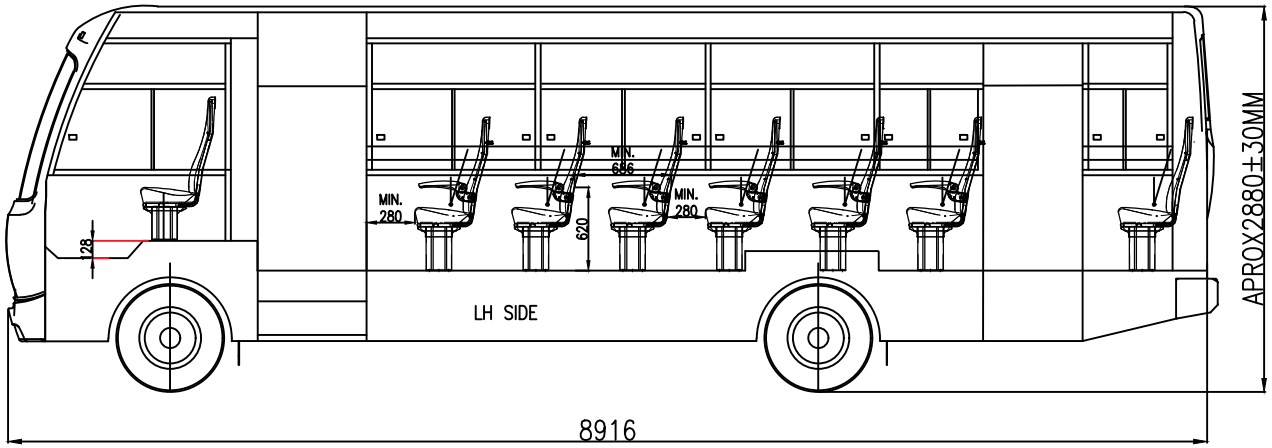

NOTE :-
1. SEAT SUPPLIER-M/S DIVERSITECH ENGG.(PVT)LTD.
2. D=DRIVER SEAT, CD=CO-DRIVER SEAT

ALL DIMENSION IN MM		AUDI AUTOMOBILES PVT.LTD PITHAMPUR (M.P.)
SCALE	NTS	CUSTOMER NAME : LAYOUT TYPE : 2X2 HHR
DRAWN BY :	J C	BUS BODY MODEL: LEGACY 2090K BS6 STD. 2X2 HHR 2DOOR 33+CD+D
CHECKED BY	J C	CHASSIS MODEL: EICHER 2090K CHASSIS BS6
DATE	07.09.12024	TITLE:: SEATING LAYOUT 2X2 HHR (33+CD+D)
		DRAWING NO. AE019684