LEGACY 2090K SCHOOL BUS SEATING(44+CD+D)

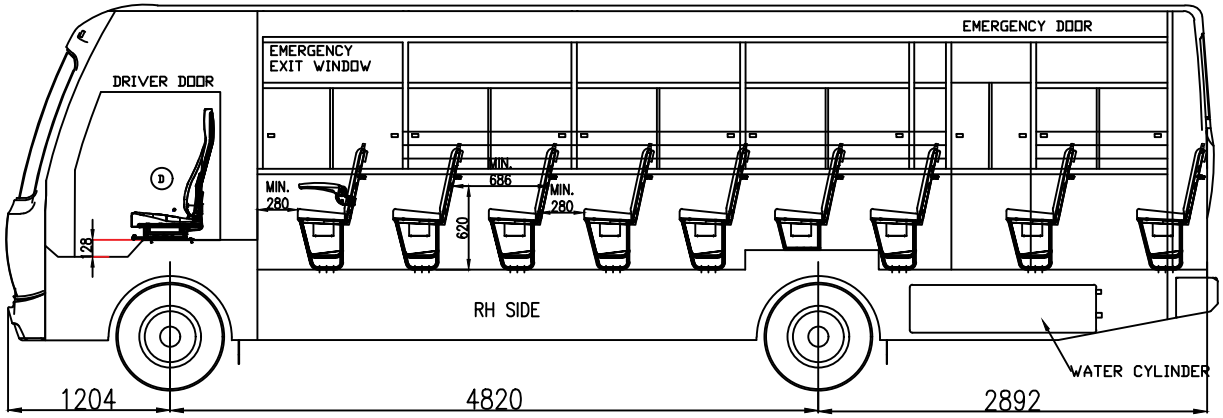

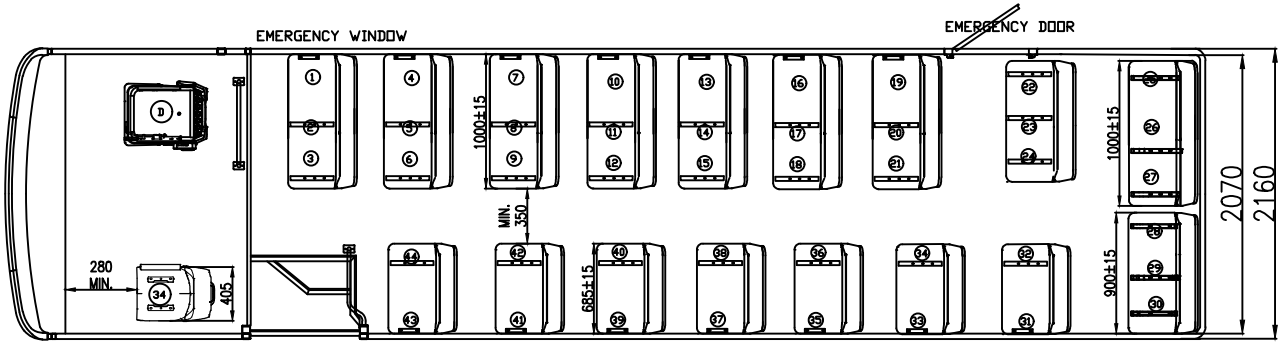

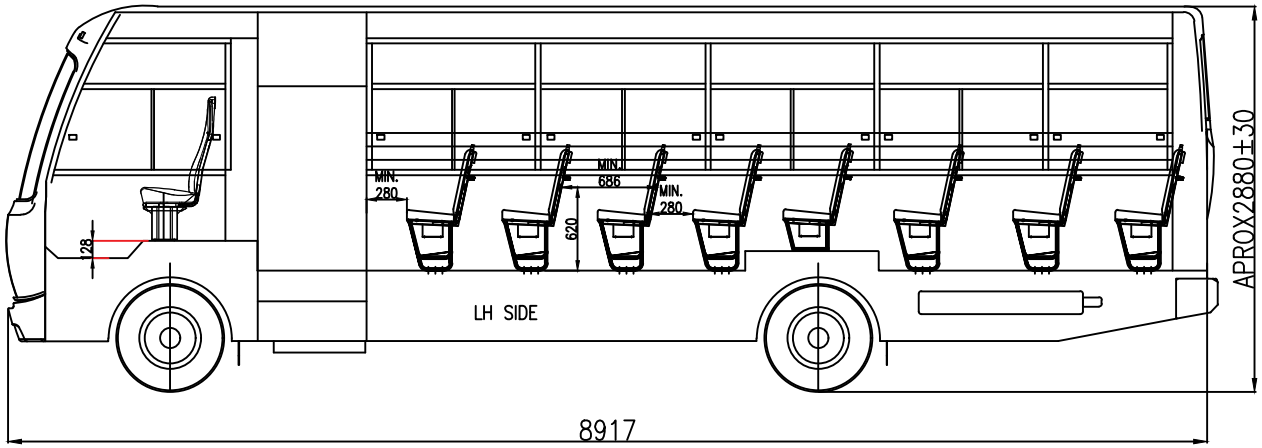

NOTE :-
1. SEAT SUPPLIER-M/S DIVERSITECH ENGG.(PVT)LTD.
2. D=DRIVER SEAT, CD=CO-DRIVER SEAT

ALL DIMENSION IN MM		AUDI AUTOMOBILES PVT.LTD PITHAMPUR (M.P.)
SCALE	NTS	CUSTOMER NAME : LAYOUT TYPE : 3X2 SCHOOL
DRAWN BY :	J C	BUS BODY MODEL: LEGACY2090K SCHOOL SEATING(44+CD+D)
CHECKED BY	J C	CHASSIS MODEL: EICHER 2090K CHASSIS BS6
DATE	07.09.2024	TITLE:: SEATING LAYOUT 3X2 (44+CD+D)
		DRAWING NO. AE019689