LEGACY 2075G STD 2X2 HHR 2DOOR (25+CD+D)

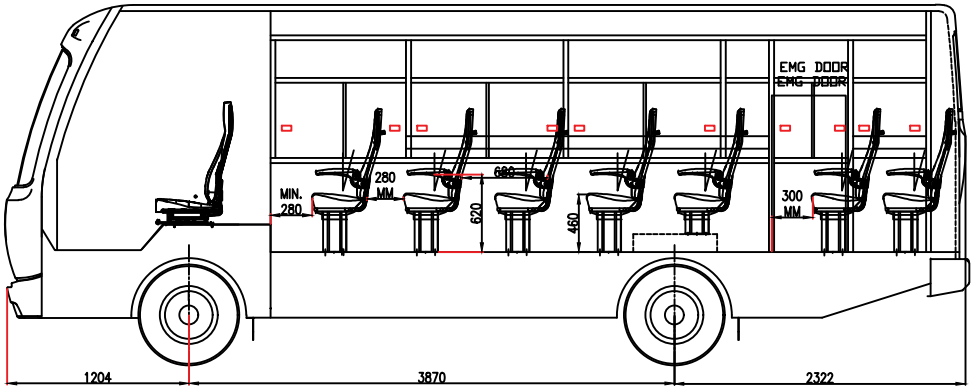

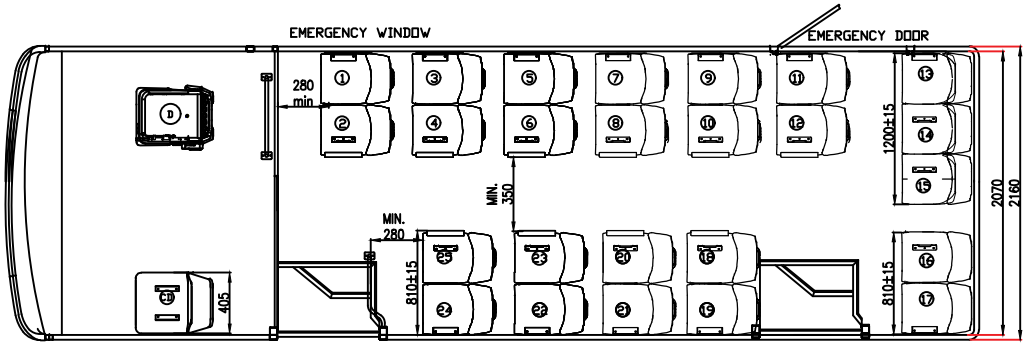

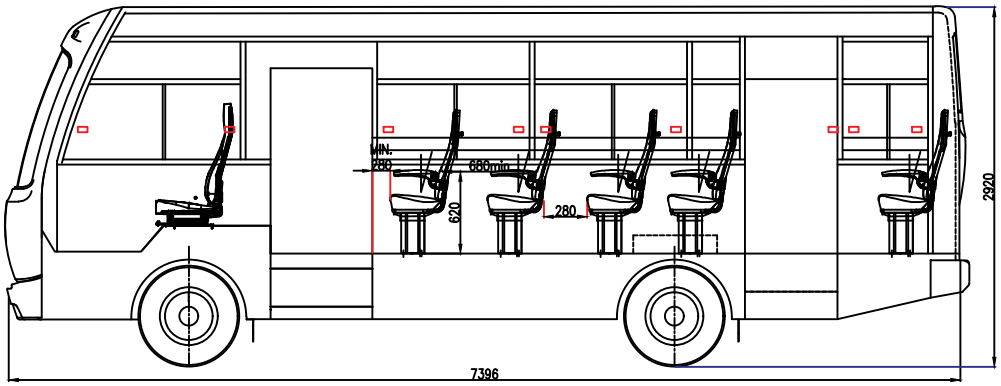

NOTE :-SEAT SUPPLIER-M/S DIVERSITECH ENGG.(PVT)LTD.
ARAI CERTIFICATE NO.----------
MINIMUM LEG SPACE 280MM
MINIMUM GANGWAY 350MM

ALL DIMENSION IN MM		AUDI AUTOMOBILES PVT.LTD PITHAMPUR (M.P.)
SCALE	NTS	CUSTOMER NAME : ICAT
DRAWN BY :	J C	BUS BODY MODEL: LEGACY 2075G STD 2X2 HHR 2DOOR (25+CD+D)
CHECKED BY	J C	CHASSIS MODEL: EICHER 2075G CHASSIS BS6
DATE	08.09.2024	TITLE: SEATING LAYOUT HHR 2X2(25+CD+D)
		DRAWING NO. AE019691